Montážní návod

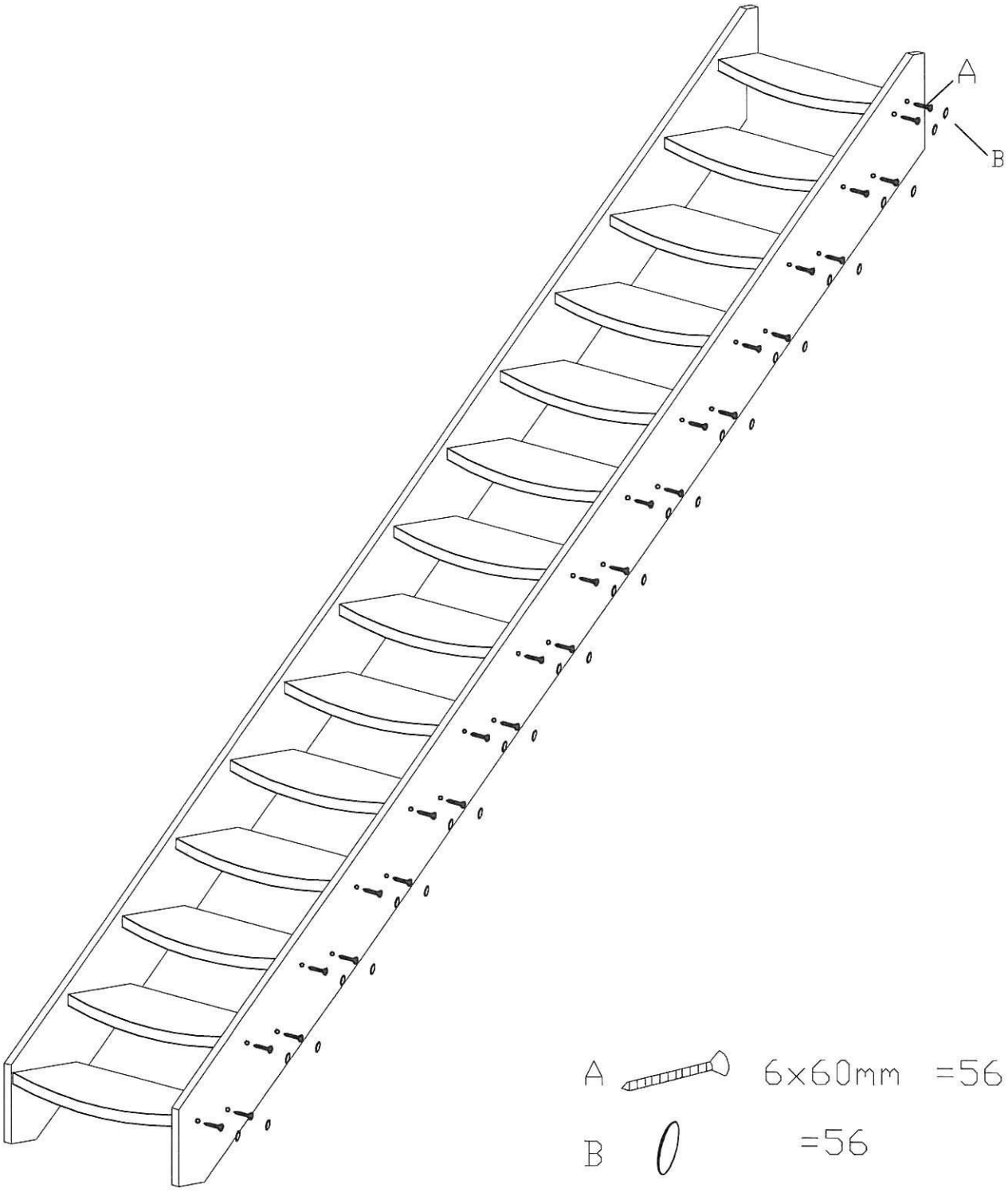

A 6x60mm =56

B 0 =56

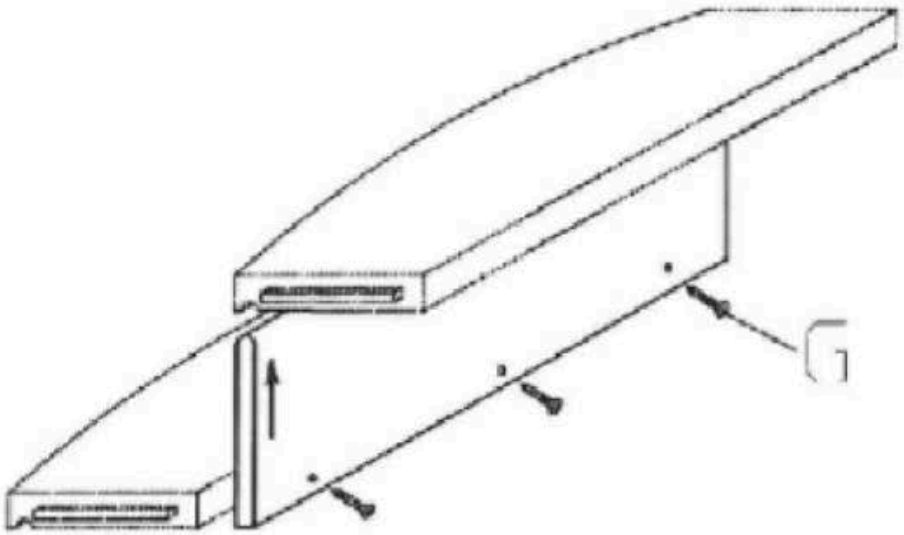

G 4x40mm =39

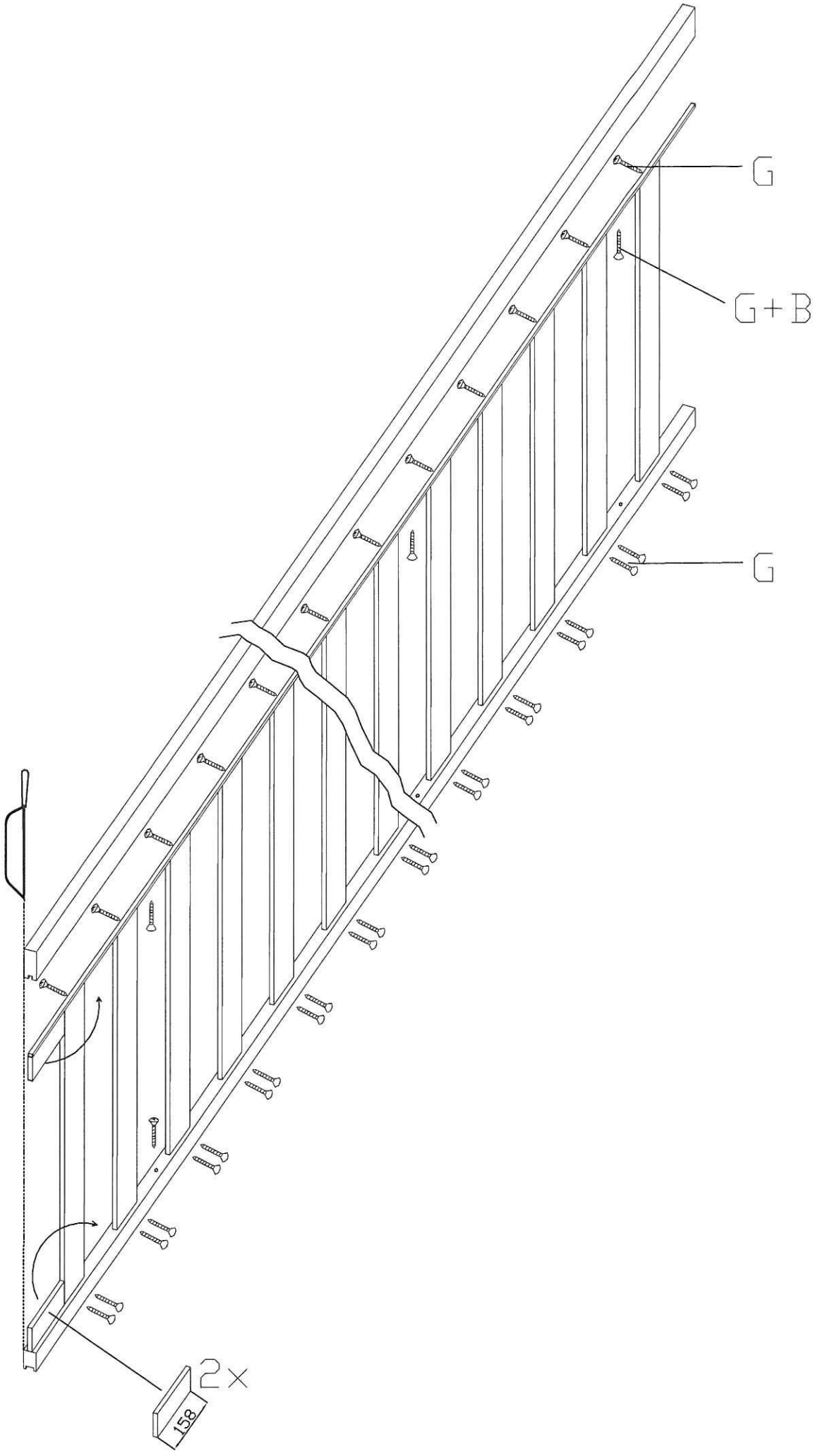
G
G+B
G
2×
158

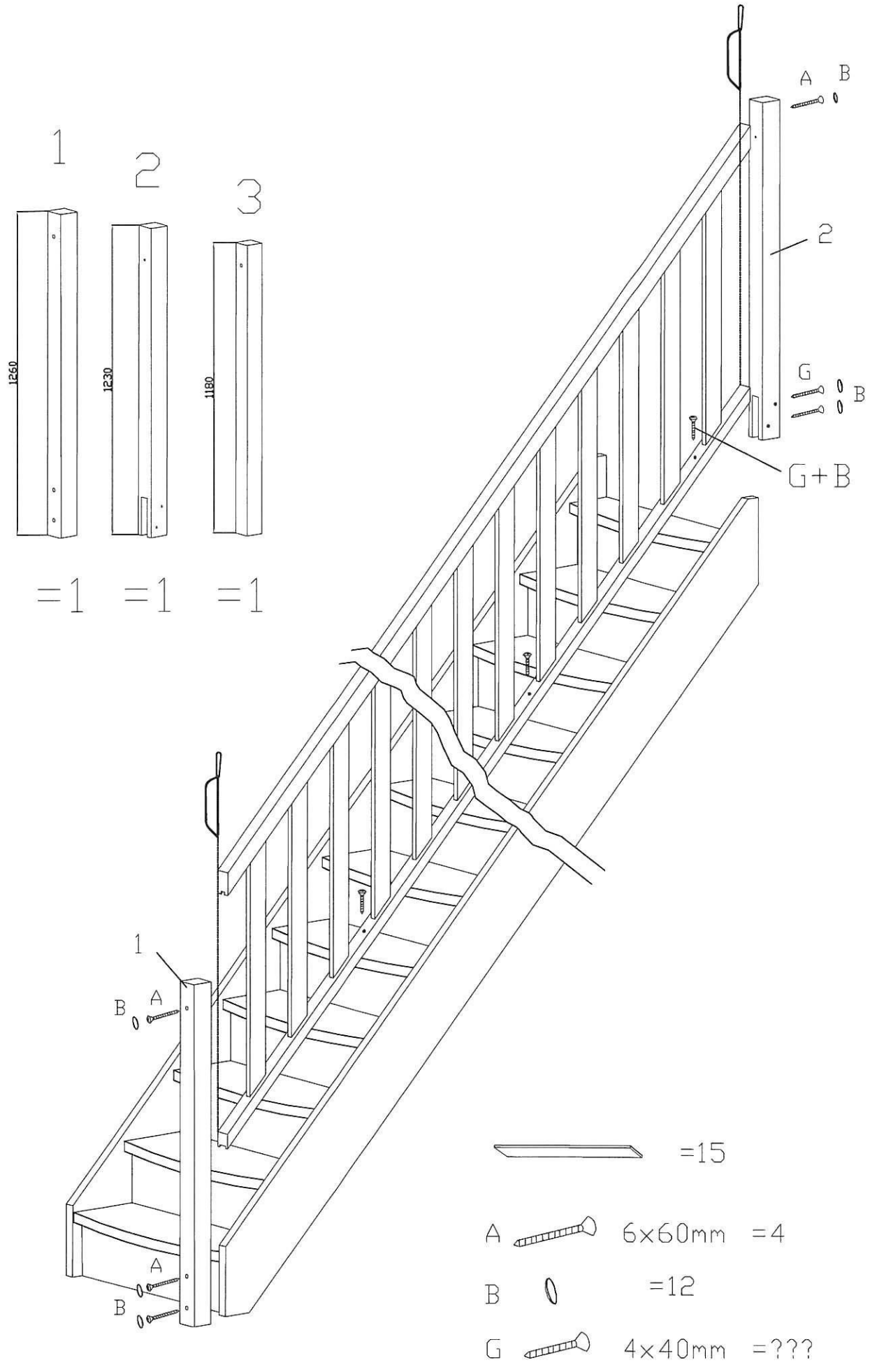
1
2
3
1260
1230
1180
=1
=1
=1
A
B
2
G
B
G+B
1
B
A
A
B
=15
A 6×60mm =4
B =12
G 4×40mm =???

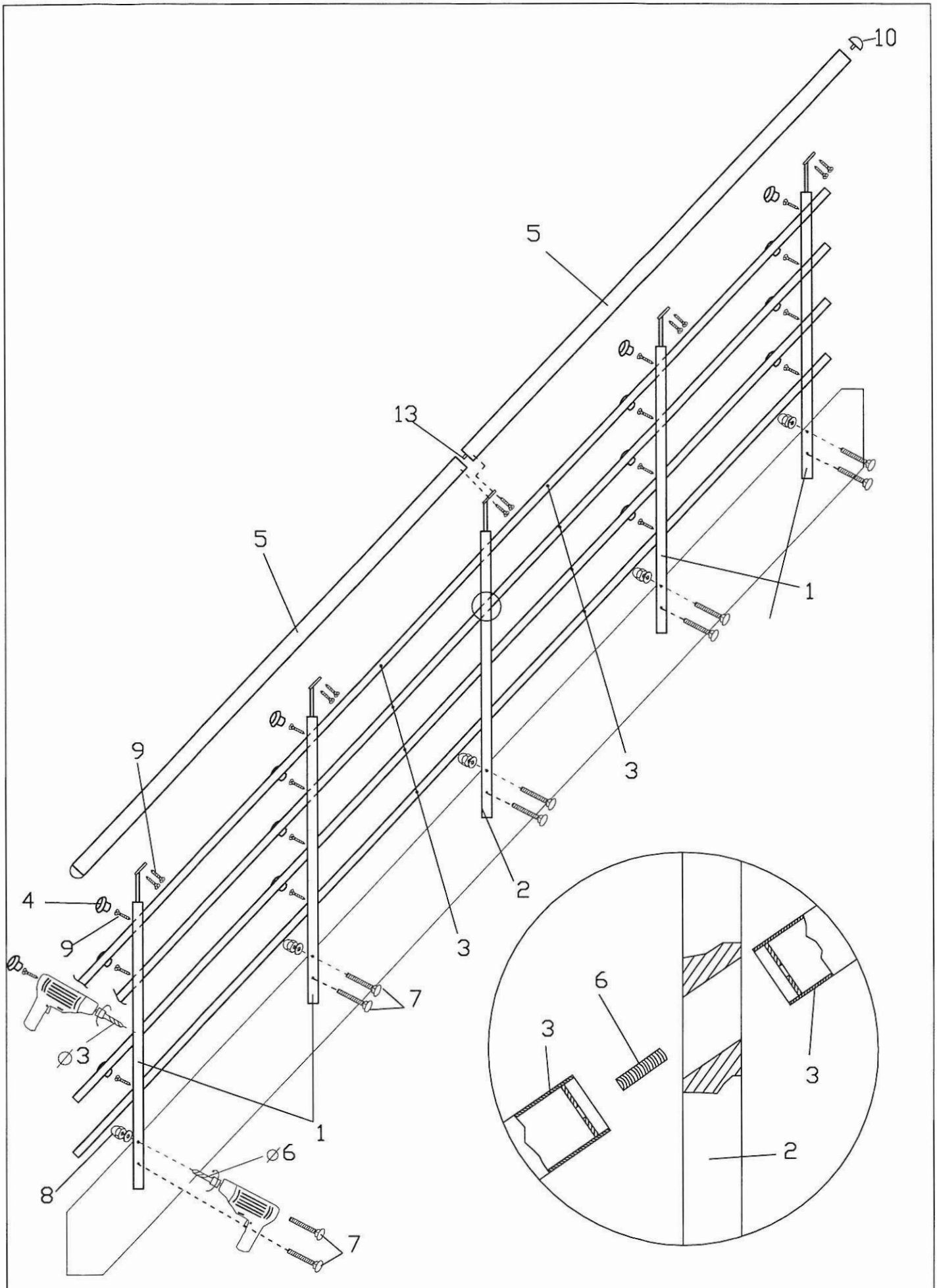
10
5
13
5
1
3
9
2
4
9
3
7
⌀3
1
6
3
3
2
⌀6
8
7

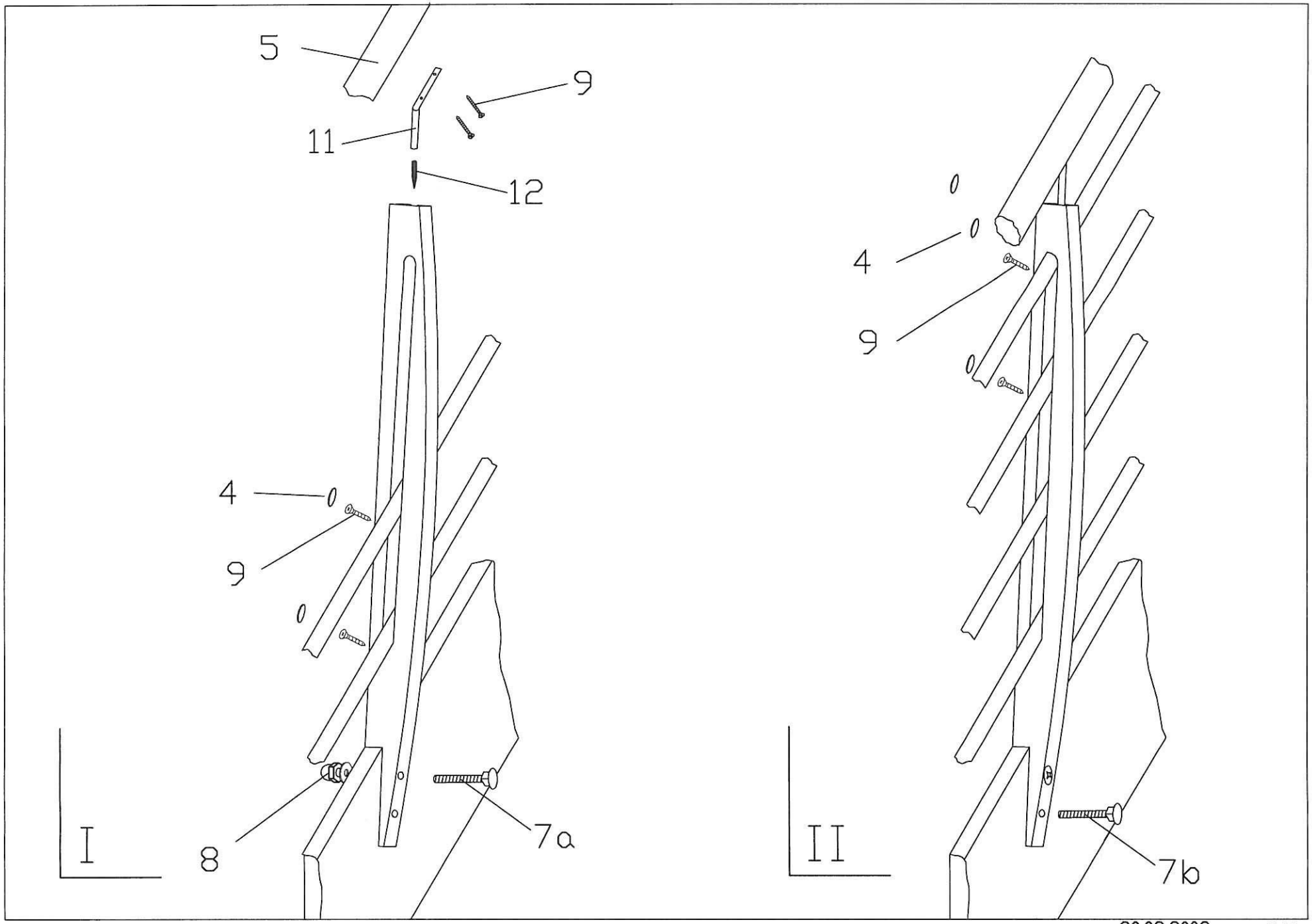
5
9
11
12
4
9
I
8
7a
4
9
II
7b

① =4	② =1	③ =8	④ =16	⑤ 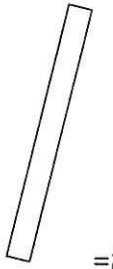 =2	⑥ M6x50 =4	⑦ 7a M6x70 =5 7b M6x60 =5	⑧ M6 A6 =10	⑨ 3,5x25 =26
⑩ =2	⑪ =5	⑫ M6x60 =5	⑬ Ø12x60 =1					

20.08.2009 4/4